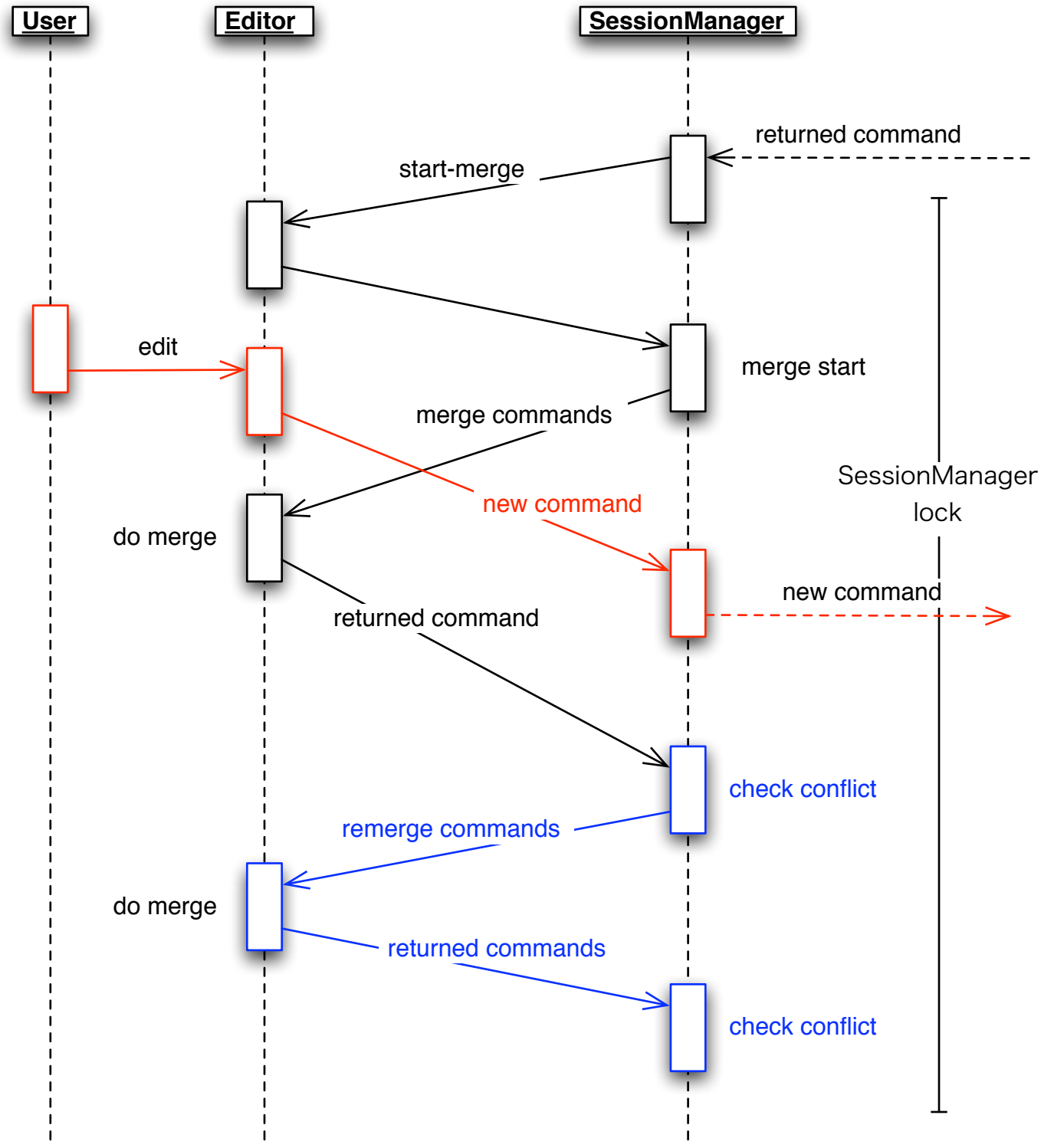
User
Editor
SessionManager
returned command
start-merge
edit
merge start
merge commands
SessionManager
lock
new command
do merge
new command
returned command
check conflict
remerge commands
do merge
returned commands
check conflict